LiGHT SKY



NEW

SEA LION

Outdoor Beam Wash BLINDER

FEATURES

- SEA LION is a multifunctional waterproof effect lighting integrating beam and wash effects in a single unit.
- It delivers rich and dynamic effects with seamless switching between beam and wash modes, offering strong stage performance.
- Equipped with two 120W RGBW main LEDs for powerful output, combined with 216 auxiliary 0.3W RGB LEDs that create flowing and chasing strip effects.
- A patented iM-Lock™ （LiGHT SKY Mortise Locking System）enables fast and flexible up, down, left, and right fixture linking with an innovative and efficient structure.
- An intelligent frost system with linear adjustment is included, while each head features motorized tilt control to generate striking visual effects in combination with beam and wash functions.
- With its compact design, the fixture is ideal for medium to large outdoor performances, concerts, and similar professional event applications.

Unit: mm

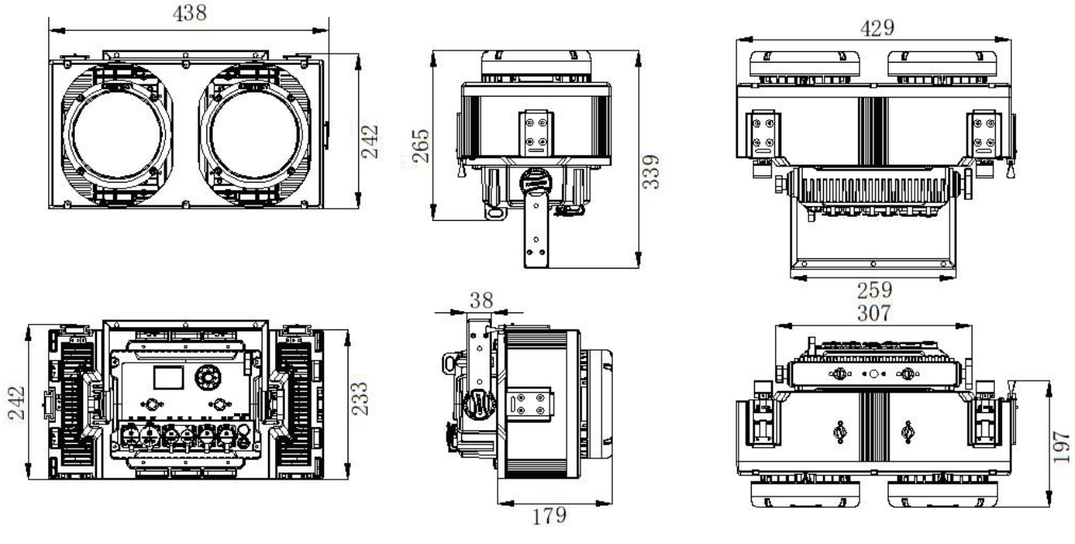

Light source and Optics

- Light source: 2 x 120W RGBW LED + 216 x 0.3W RGB LED
- Beam Angle: 3.2°-29.1°
- Field Angle: 4.01°-74.83°
- Color Rendering Index: Ra≥79.6
- Colour Temperature Output: 2500K-10000K
- Lumen Output: 1946 lm
- Illuminance: 20, 907 lx @ 5m
- Light Source Theory Life Span: ≥20,000 h

Effects

- Color Mixing System: Uniform RGBW color mixing system with independent control of each color, enabling a wide variety of visual effects.
- Intelligent Frost: Linearly adjustable frost function to enhance color mixing effects.
- Front Aura: Individually controllable front aura, supporting free-flowing chase and color-changing effects.
- Tilt-axis: Motorised tilt ±25°
- Effect Macros: Static effect macros and dynamic effect macros functions
- Dimming: Electronic dimming with four dimming curves
- Strobe: 1-30Hz electronic strobe and random strobe

Control and Programming

- Control Channels: 26CH，48CH(see channel chart for details)
- Control Protocols: DMX512, RDM, Art-Net, sACN
- Data Connection: RJ45(Art-Net) In/Out，3 pin or 5 pin XLR In/Out
- Display: LCD screen

Software

- Software upgrade: via DMX interface
- Temperature control: Intelligent system for LED lifespan

Power and Electrical

- Input Voltage Range: AC 100-240V 50/60Hz
- Max Power Consumption: 320W
- Power Factor: 0.98
- Maximum Current: 1.45A/220V ; 3.2A/100V

Size and Weight

- Product Dimensions: 438mm x 265mm x 242mm
- Net Weight: 13.8 kg
- Carton Dimensions: 510mm × 320mm × 380mm
- Gross Weight: 16.5 kg

Other

- Protection Level: IP66
- Operating Environment: -20℃~45℃
- Maximum Surface Temperature: 65℃
- Locking System: LiGHT SKY Mortise Locking System

Factory Configuration

- Power Cable: 1 pc (Part No.: F0200030016)
- Signal Cable: 1 pc (Part No.: F0200020008)
- Safety Rope: 1 pc (Part No.: F0200010002)

Optional Accessories/Packaging

- Clamp(LiGHT SKY): Part No.: C0499990075 (Compatible with tubes of Ø40-60 mm)
- Clamp(Neutral): Part No.: C0499990021 (Compatible with tubes of Ø40-60 mm)
- Flycase Dimensions(4 in 1): 960mm x 700mm x 465mm
- Flycase Gross Weight(4 in 1): 89.0kg

Illumination Diagram

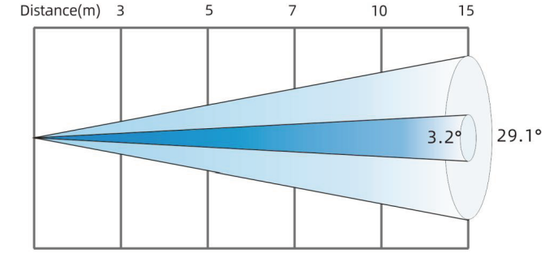

3.2° Lux R	9972	3590	1832	898	399
3.2° Lux G	24778	8920	4551	2230	991
3.2° Lux B	1975	711	363	178	79
3.2° Lux W	32306	11630	5934	2908	1292
3.2°RGBW	58075	20907	10667	5227	2323
Diameter(m)	0.17	0.28	0.4	0.56	0.84
29.1° Lux R	63	22.5	11	6	3
29.1° Lux G	125	45	23	11	5
29.1° Lux B	18	6.4	3	2	1
29.1° Lux W	186	67	34	17	7
29.1° RGBW	317	114	58	29	13
Diameter(m)	1.56	2.6	3.65	5.2	7.8

Modularised Effects Series



